IF2140 – Pemodelan Basis Data / IF2240 – Basis Data

SQL (Part 4)

©2020 - Tim Pengajar IF2140 Semester I TA 2020/2021

KNOWLEDGE & SOFTWARE ENGINEERING

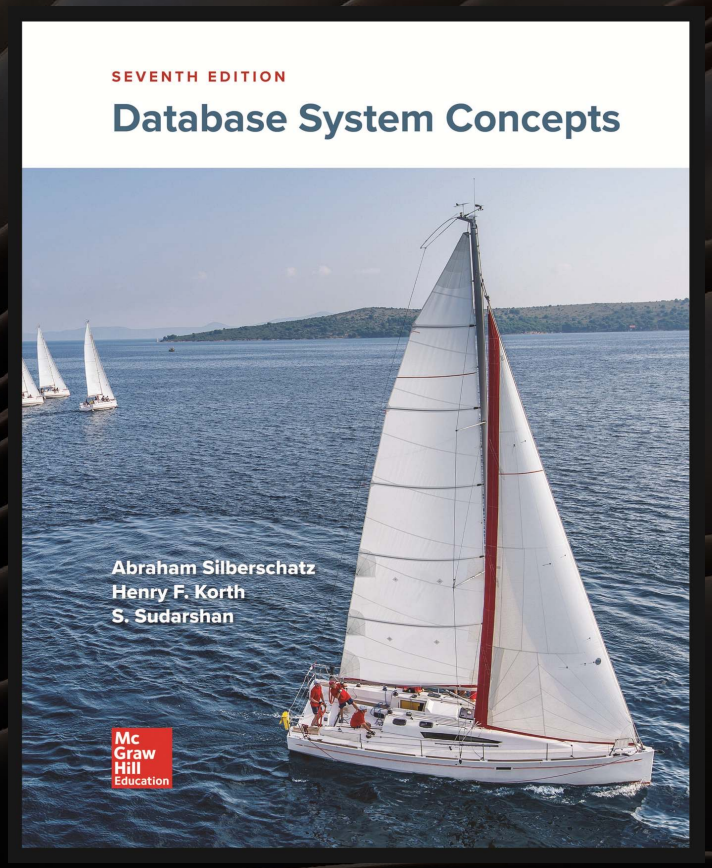

Sumber

Silberschatz, Korth, Sudarshan: "Database System Concepts", 7th Edition

- Chapter 3 : Introduction to SQL
- Chapter 4 : Intermediate SQL

©2022 - Tim Pengajar IF2140 Pemodelan Basis Data

Schema Diagram

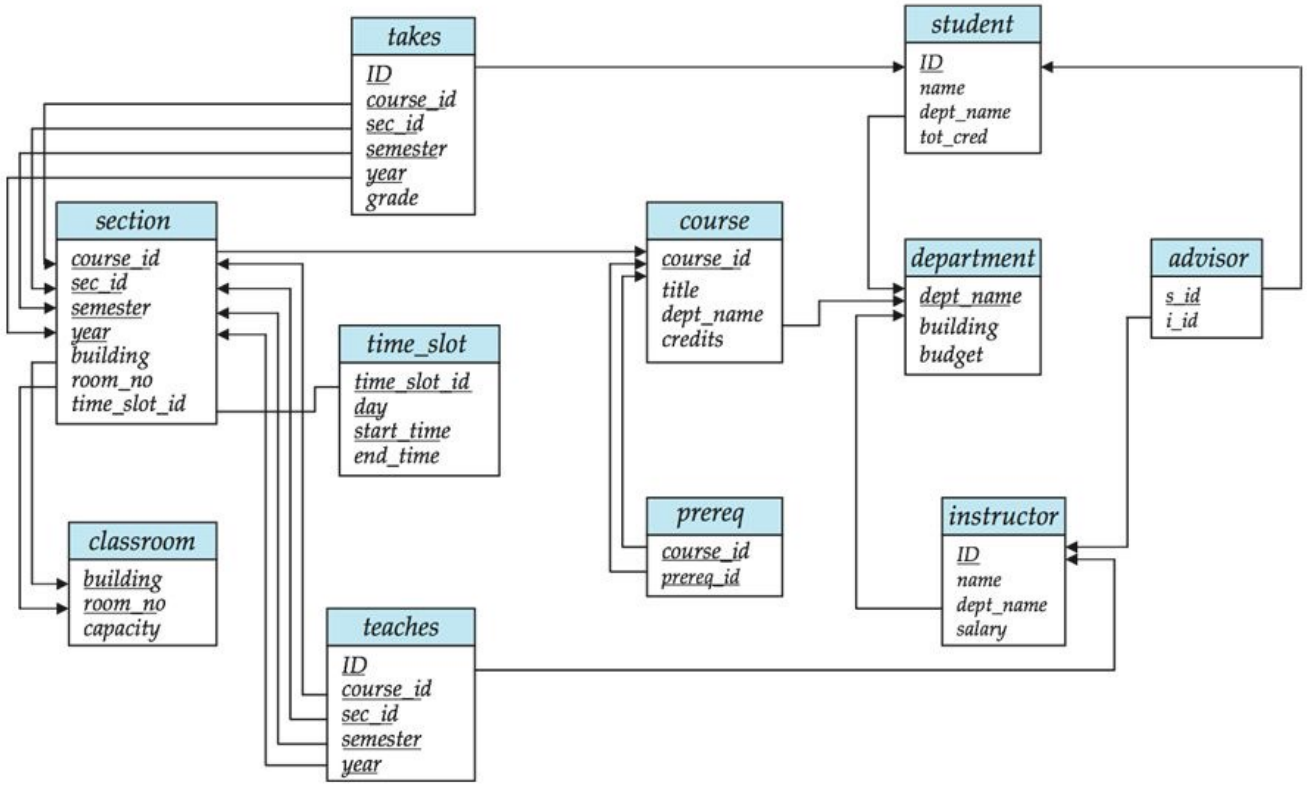

Joined Relations

Join operations take two relations and return as a result another relation.

A join operation is a Cartesian product which requires that tuples in the two relations match (under some condition). It also specifies the attributes that are present in the result of the join

The join operations are typically used as subquery expressions in the **from** clause

Three types of joins:

- Natural join
- Inner join
- Outer join

©2022 - Tim Pengajar IF2140 Pemodelan Basis Data
KNOWLEDGE & SOFTWARE ENGINEERING

Natural Join in SQL

Natural join matches tuples with the same values for all common attributes, and retains only one copy of each common column.

List the names of instructors along with the course ID of the courses that they taught

- **select** *name, course_id*
  from *students, takes*
  where *student.ID = takes.ID*;

Same query in SQL with "natural join" construct

- **select** *name, course_id*
  from *student* **natural join** *takes*;

©2022 - Tim Pengajar IF2140 Pemodelan Basis Data
KNOWLEDGE & SOFTWARE ENGINEERING

Natural Join in SQL (Cont.)

The **from** clause can have multiple relations combined using natural join:

select $A_1, A_2, \ldots A_n$
from r_1 **natural join** r_2 **natural join** .. **natural join** r_n
where P ;

©2022 - Tim Pengajar IF2140 Pemodelan Basis Data
KNOWLEDGE & SOFTWARE ENGINEERING

Student Relation

ID	*name*	*dept_name*	*tot_cred*
00128	Zhang	Comp. Sci.	102
12345	Shankar	Comp. Sci.	32
19991	Brandt	History	80
23121	Chavez	Finance	110
44553	Peltier	Physics	56
45678	Levy	Physics	46
54321	Williams	Comp. Sci.	54
55739	Sanchez	Music	38
70557	Snow	Physics	0
76543	Brown	Comp. Sci.	58
76653	Aoi	Elec. Eng.	60
98765	Bourikas	Elec. Eng.	98
98988	Tanaka	Biology	120

©2022 - Tim Pengajar IF2140 Pemodelan Basis Data

Takes Relation

ID	*course_id*	*sec_id*	*semester*	*year*	*grade*
00128	CS-101	1	Fall	2017	A
00128	CS-347	1	Fall	2017	A-
12345	CS-101	1	Fall	2017	C
12345	CS-190	2	Spring	2017	A
12345	CS-315	1	Spring	2018	A
12345	CS-347	1	Fall	2017	A
19991	HIS-351	1	Spring	2018	B
23121	FIN-201	1	Spring	2018	C+
44553	PHY-101	1	Fall	2017	B-
45678	CS-101	1	Fall	2017	F
45678	CS-101	1	Spring	2018	B+
45678	CS-319	1	Spring	2018	B
54321	CS-101	1	Fall	2017	A-
54321	CS-190	2	Spring	2017	B+
55739	MU-199	1	Spring	2018	A-
76543	CS-101	1	Fall	2017	A
76543	CS-319	2	Spring	2018	A
76653	EE-181	1	Spring	2017	C
98765	CS-101	1	Fall	2017	C-
98765	CS-315	1	Spring	2018	B
98988	BIO-101	1	Summer	2017	A
98988	BIO-301	1	Summer	2018	*null*

©2022 - Tim Pengajar IF2140 Pemodelan Basis Data

student natural join *takes*

ID	*name*	*dept_name*	*tot_cred*	*course_id*	*sec_id*	*semester*	*year*	*grade*
00128	Zhang	Comp. Sci.	102	CS-101	1	Fall	2017	A
00128	Zhang	Comp. Sci.	102	CS-347	1	Fall	2017	A-
12345	Shankar	Comp. Sci.	32	CS-101	1	Fall	2017	C
12345	Shankar	Comp. Sci.	32	CS-190	2	Spring	2017	A
12345	Shankar	Comp. Sci.	32	CS-315	1	Spring	2018	A
12345	Shankar	Comp. Sci.	32	CS-347	1	Fall	2017	A
19991	Brandt	History	80	HIS-351	1	Spring	2018	B
23121	Chavez	Finance	110	FIN-201	1	Spring	2018	C+
44553	Peltier	Physics	56	PHY-101	1	Fall	2017	B-
45678	Levy	Physics	46	CS-101	1	Fall	2017	F
45678	Levy	Physics	46	CS-101	1	Spring	2018	B+
45678	Levy	Physics	46	CS-319	1	Spring	2018	B
54321	Williams	Comp. Sci.	54	CS-101	1	Fall	2017	A-
54321	Williams	Comp. Sci.	54	CS-190	2	Spring	2017	B+
55739	Sanchez	Music	38	MU-199	1	Spring	2018	A-
76543	Brown	Comp. Sci.	58	CS-101	1	Fall	2017	A
76543	Brown	Comp. Sci.	58	CS-319	2	Spring	2018	A
76653	Aoi	Elec. Eng.	60	EE-181	1	Spring	2017	C
98765	Bourikas	Elec. Eng.	98	CS-101	1	Fall	2017	C-
98765	Bourikas	Elec. Eng.	98	CS-315	1	Spring	2018	B
98988	Tanaka	Biology	120	BIO-101	1	Summer	2017	A
98988	Tanaka	Biology	120	BIO-301	1	Summer	2018	*null*

©2022 - Tim Pengajar IF2140 Pemodelan Basis Data

Dangerous in Natural Join

Beware of unrelated attributes with same name which get equated incorrectly

Example -- List the names of students instructors along with the titles of courses that they have taken

- Correct version

```
select name, title
from student natural join takes, course
where takes.course_id = course.course_id;
```

- Incorrect version

```
select name, title
from student natural join takes natural join course;
```

  - This query omits all (student name, course title) pairs where the student takes a course in a department other than the student's own department.
  - The correct version (above), correctly outputs such pairs.

©2022 - Tim Pengajar IF2140 Pemodelan Basis Data

Outer Join

An extension of the join operation that avoids loss of information.

Computes the join and then adds tuples form one relation that does not match tuples in the other relation to the result of the join.

Uses *null* values.

Three forms of outer join:

- left outer join
- right outer join
- full outer join

©2022 - Tim Pengajar IF2140 Pemodelan Basis Data

Outer Join Examples

Relation *course*

course_id	*title*	*dept_name*	*credits*
BIO-301	Genetics	Biology	4
CS-190	Game Design	Comp. Sci.	4
CS-315	Robotics	Comp. Sci.	3

Relation *prereq*

course_id	*prereq_id*
BIO-301	BIO-101
CS-190	CS-101
CS-347	CS-101

Observe that

course information is missing CS-347

prereq information is missing CS-315

©2022 - Tim Pengajar IF2140 Pemodelan Basis Data
KNOWLEDGE & SOFTWARE ENGINEERING

Left Outer Join

course natural left outer join *prereq*

course_id	*title*	*dept_name*	*credits*	*prereq_id*
BIO-301	Genetics	Biology	4	BIO-101
CS-190	Game Design	Comp. Sci.	4	CS-101
CS-315	Robotics	Comp. Sci.	3	*null*

In relational algebra: *course* ⟕ *prereq*

©2022 - Tim Pengajar IF2140 Pemodelan Basis Data
KNOWLEDGE & SOFTWARE ENGINEERING

Right Outer Join

course natural right outer join *prereq*

course_id	*title*	*dept_name*	*credits*	*prereq_id*
BIO-301	Genetics	Biology	4	BIO-101
CS-190	Game Design	Comp. Sci.	4	CS-101
CS-347	*null*	*null*	*null*	CS-101

In relational algebra: *course* ⟕ *prereq*

©2022 - Tim Pengajar IF2140 Pemodelan Basis Data

Full Outer Join

course natural full outer join *prereq*

course_id	*title*	*dept_name*	*credits*	*prereq_id*
BIO-301	Genetics	Biology	4	BIO-101
CS-190	Game Design	Comp. Sci.	4	CS-101
CS-315	Robotics	Comp. Sci.	3	*null*
CS-347	*null*	*null*	*null*	CS-101

In relational algebra: *course* ⟗ *prereq*

©2022 - Tim Pengajar IF2140 Pemodelan Basis Data
KNOWLEDGE & SOFTWARE ENGINEERING

Joined Types and Conditions

Join operations take two relations and return as a result another relation.

These additional operations are typically used as subquery expressions in the **from** clause

Join condition – defines which tuples in the two relations match.

Join type – defines how tuples in each relation that do not match any tuple in the other relation (based on the join condition) are treated.

Join types	*Join conditions*
inner join	**natural**
left outer join	**on** <predicate>
right outer join	**using** $(A_1, A_2, \ldots, A_n)$
full outer join	

©2022 - Tim Pengajar IF2140 Pemodelan Basis Data

Joined Relations – Examples

course natural right outer join *prereq*

course_id	*title*	*dept_name*	*credits*	*prereq_id*
BIO-301	Genetics	Biology	4	BIO-101
CS-190	Game Design	Comp. Sci.	4	CS-101
CS-347	*null*	*null*	*null*	CS-101

course full outer join *prereq* using (*course_id*)

course_id	*title*	*dept_name*	*credits*	*prereq_id*
BIO-301	Genetics	Biology	4	BIO-101
CS-190	Game Design	Comp. Sci.	4	CS-101
CS-315	Robotics	Comp. Sci.	3	*null*
CS-347	*null*	*null*	*null*	CS-101

©2022 - Tim Pengajar IF2140 Pemodelan Basis Data

Joined Relations – Examples

course inner join *prereq* on
course.course_id = prereq.course_id

course_id	*title*	*dept_name*	*credits*	*prereq_id*	*course_id*
BIO-301	Genetics	Biology	4	BIO-101	BIO-301
CS-190	Game Design	Comp. Sci.	4	CS-101	CS-190

What is the difference between the above, and a natural join?

course left outer join *prereq* on
course.course_id = prereq.course_id

course_id	*title*	*dept_name*	*credits*	*prereq_id*	*course_id*
BIO-301	Genetics	Biology	4	BIO-101	BIO-301
CS-190	Game Design	Comp. Sci.	4	CS-101	CS-190
CS-315	Robotics	Comp. Sci.	3	*null*	*null*

©2022 - Tim Pengajar IF2140 Pemodelan Basis Data
KNOWLEDGE & SOFTWARE ENGINEERING

Joined Relations – Examples

course natural right outer join *prereq*

course_id	*title*	*dept_name*	*credits*	*prereq_id*
BIO-301	Genetics	Biology	4	BIO-101
CS-190	Game Design	Comp. Sci.	4	CS-101
CS-347	*null*	*null*	*null*	CS-101

course full outer join *prereq* using (*course_id*)

course_id	*title*	*dept_name*	*credits*	*prereq_id*
BIO-301	Genetics	Biology	4	BIO-101
CS-190	Game Design	Comp. Sci.	4	CS-101
CS-315	Robotics	Comp. Sci.	3	*null*
CS-347	*null*	*null*	*null*	CS-101

©2022 - Tim Pengajar IF2140 Pemodelan Basis Data
KNOWLEDGE & SOFTWARE ENGINEERING

Views

In some cases, it is not desirable for all users to see the entire logical model (that is, all the actual relations stored in the database.)

Consider a person who needs to know an instructors name and department, but not the salary. This person should see a relation described, in SQL, by

```
select ID, name, dept_name
 from instructor
```

A **view** provides a mechanism to hide certain data from the view of certain users.

Any relation that is not of the conceptual model but is made visible to a user as a "virtual relation" is called a **view**.

View Definition

A view is defined using the **create view** statement which has the form

create view *v* **as** < query expression >

where <query expression> is any legal SQL expression. The view name is represented by *v*.

Once a view is defined, the view name can be used to refer to the virtual relation that the view generates.

View definition is not the same as creating a new relation by evaluating the query expression

- Rather, a view definition causes the saving of an expression; the expression is substituted into queries using the view.

View Definition and Use

A view of instructors without their salary

```
create view faculty as
    select ID, name, dept_name
    from instructor
```

Find all instructors in the Biology department

```
select name
from faculty
where dept_name = 'Biology'
```

Create a view of department salary totals

```
create view departments_total_salary(dept_name, total_salary) as
    select dept_name, sum (salary)
    from instructor
    group by dept_name;
```

Views Defined Using Other Views

One view may be used in the expression defining another view

A view relation v_1 is said to ***depend directly*** on a view relation v_2 if v_2 is used in the expression defining v_1

A view relation v_1 is said to ***depend on*** view relation v_2 if either v_1 depends directly to v_2 or there is a path of dependencies from v_1 to v_2

A view relation v is said to be ***recursive*** if it depends on itself.

Views Defined Using Other Views

```
create view physics_fall_2017 as
   select course.course_id, sec_id, building, room_number
   from course, section
   where course.course_id = section.course_id
            and course.dept_name = 'Physics'
            and section.semester = 'Fall'
            and section.year = '2017';


create view physics_fall_2017_watson as
    select course_id, room_number
    from physics_fall_2017
    where building= 'Watson';
```

KNOWLEDGE & SOFTWARE ENGINEERING

Materialized Views

Certain database systems allow view relations to be physically stored.

- Physical copy created when the view is defined.
- Such views are called **Materialized view**:

If relations used in the query are updated, the materialized view result becomes out of date

- Need to **maintain** the view, by updating the view whenever the underlying relations are updated.